6F-2, No.51, Sec.1, MinSheng E.Rd • Taipei 104 • Taiwan (R.O.C.)
Tel: 886-2-25652500 • **Fax:** 886-2-2551-5250 • **E-mail:** sales@temstron.com

Specification Sheet

Customer Name	XXXX	CUST P/N	836AN-0129Z
Approval No.	PD	Temstron P/N	TS-A836AN-0129Z
Lot No.		Date	2026.01.24
Series	SMD	Version	A1

(1) Connection

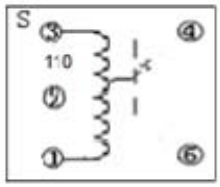

(2) Size Diagram（Unit：MM）

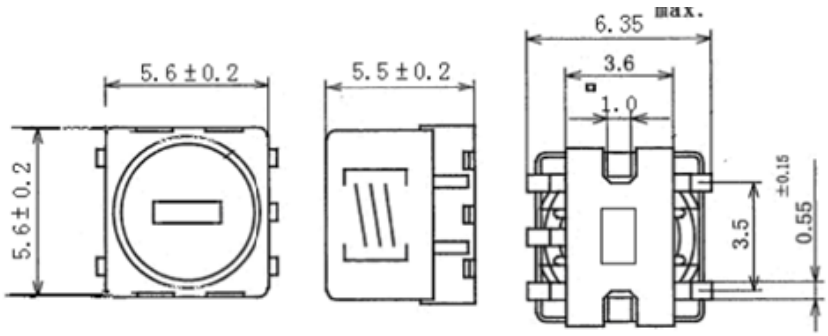

(3) Winding Info		(4) Electric Characteristics		
Items	N1	Frequency Variable	0.796 MHz	L_{13}：330uH±6%(Min)
Winding	3-1	Unloaded(Q)		≥45
Turns	110Ts	L location		1-3
Wire	2UEW ϕ 0.06	Capacity(out)		
Color		Torque	45-300g/CM	
Print		Remark		
Operation Temp	-25℃～+85℃	Operation Humidity	25%～85%	
Storage Temp	-40℃～+70℃	Storage Humidity	45%～75%RH	
Note				

(5) Testing Data

Test Frequency	0.796 MHz	Test Voltage	100V
Test Temperature	23℃	Relative Humidity	65%
Test Equipment	QBG-3E	Quantity	10PCS

Electrical Character: L_{13}：330uH±6% (Min)　Q: 45(Min)

ITEM	L-Max.	L-Min.	Q	ITEM	L-Max.	L-Min.	Q
1	449	271	47	6	449	271	47
2	450	272	48	7	448	270	48
3	451	271	47	8	451	271	47
4	450	271	48	9	452	271	48
5	451	272	47	10	450	270	47
				Average	450.1	271	47.4

Approval	Supervisor	Designer
C. K. Chang	M. Y. Chen	F.L.Lai

Recommend Soldering Conditions Reflow Soldering

6F-2, No.51, Sec.1, MinSheng E.Rd • Taipei 104 • Taiwan (R.O.C.)
Tel: 886-2-25652500 • **Fax:** 886-2-2551-5250 • **E-mail:** sales@temstron.com

- Under 350 Degrees, Within 3 seconds, 2 Rounds -

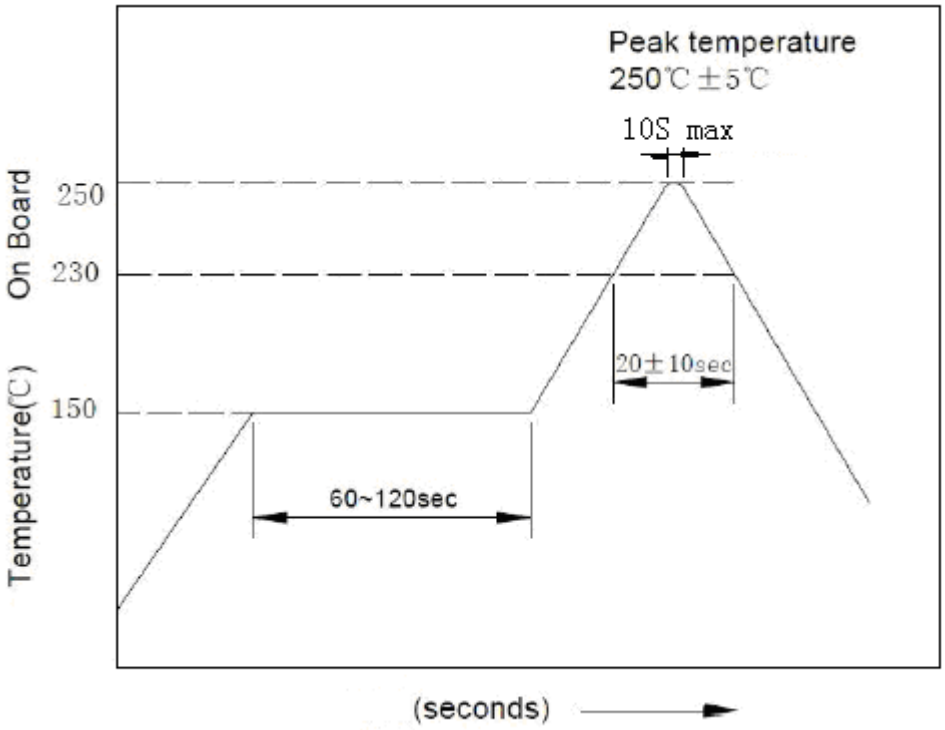

Stability and Test Conditions

Item	Requirement	Test Method
MIL-STD-202G Method 108A *High Temperature Storage Test	1. No obvious appearance defects 2.Changes of inductance under 10% 3.Changes of Quality Factor under 30% 4.Changes of DC resistance under 10%	Temp:85±2℃; Time:96±2 hours, set the samples in room temp for 1 hour, test within 2 hours 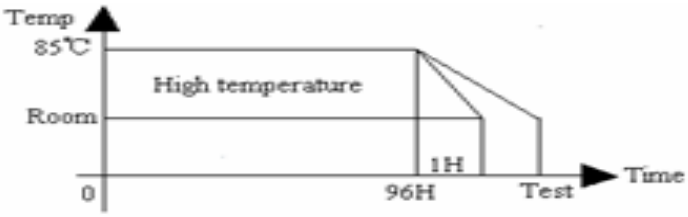
IEC 68-2-1A 6.1 6.2 *Low Temperature Storage Test	1. No obvious appearance defects 2.Changes of inductance	Temp:-25±2℃; Time:96±2hours, set the samples in room temp for 1 hour, test within 2 hours.

	under 10% 3.Changes of Quality Factor under 30% 4.Changes of DC resistance under 10%	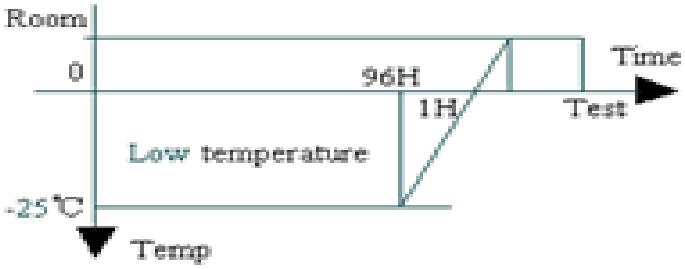
MIL-STD-202G Method 103B *Humidity Test	1. No obvious appearance defects 2. Changes of inductance under 10% 3.Changes of Quality Factor under 30% 4.Changes of DC resistance under 10%	1. Dry the samples in 40±5℃ temp condition for 24 hours 2. Test after drying 3. Expose: Temp 40±2℃,Humidity 93±3%RH, for 96±2 hours 4. Test in the chamber after exposing 5. Set the samples in room temp for 1 hour, test within 2 hours. 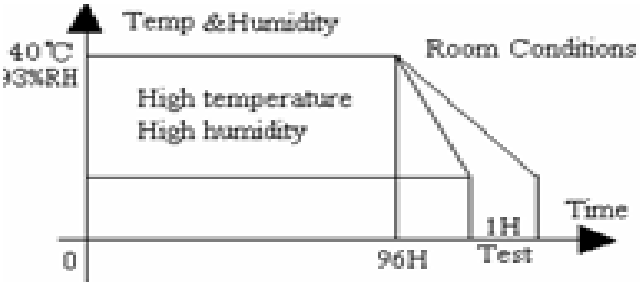
MIL-STD-202G Method 208H IPC-J-STD-002B * Solderability Test	95% solder coverage	1. Immerse the solder in the flux, then immerse the solder into 245±5℃ lead-free solder furnace for 5 seconds 2. To solder: Sn(63)/Pb(37) 3. Flux: rosin
MIL-STD-202G Method 201A *Vibration Test	1. No obvious appearance defects 2.Changes of inductance under 10% 3.Changes of Quality Factor under 30% 4.Changes of DC resistance under 10%	Vibrate along the x, y and z axis with 10-55Hz Vibration rate and 0.75mm amplitude for individually 2 hours (Total 6 hours) 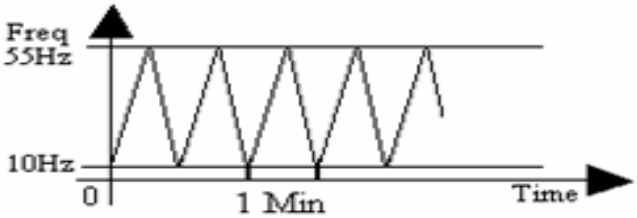
* Solder heat resistance test	1. Smear soldering paste on circuit board, solder at 350 degrees for 2 times. The Pin won't come off and the bottom won't deform . 2. After soldering the reflow at 250 degrees for 3 seconds, the Pin won't come off and the bottom won't deform	(Reflow) 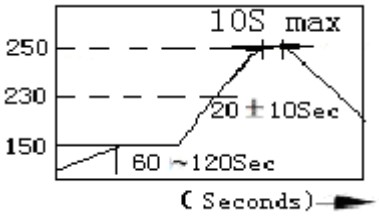

Tape Dimensions

Tape Dimensions

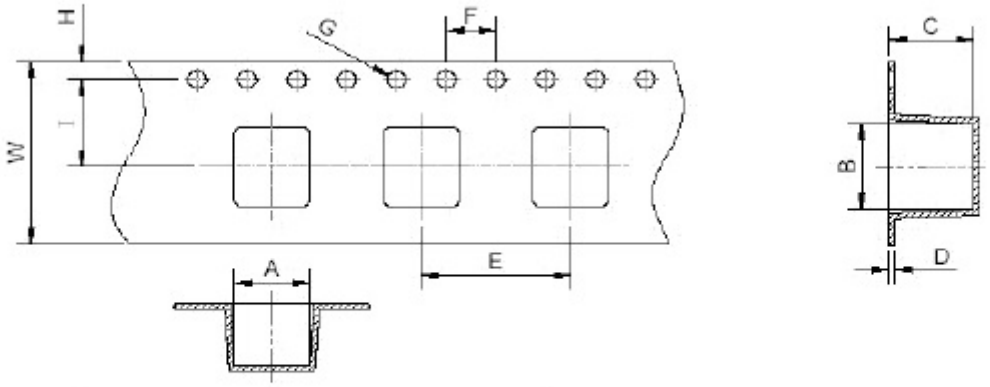

	W=16±0.3 mm		Unit: mm						
ITEM	A	B	C	D	E	F	G	H	I
DIM	6.56	8.0 ±0.2	6.51	0.5 ±0.05	12 ±0.2	4.0 ±0.1	1.5 ±0.1	1.75 ±0.1	7.5 ±0.2

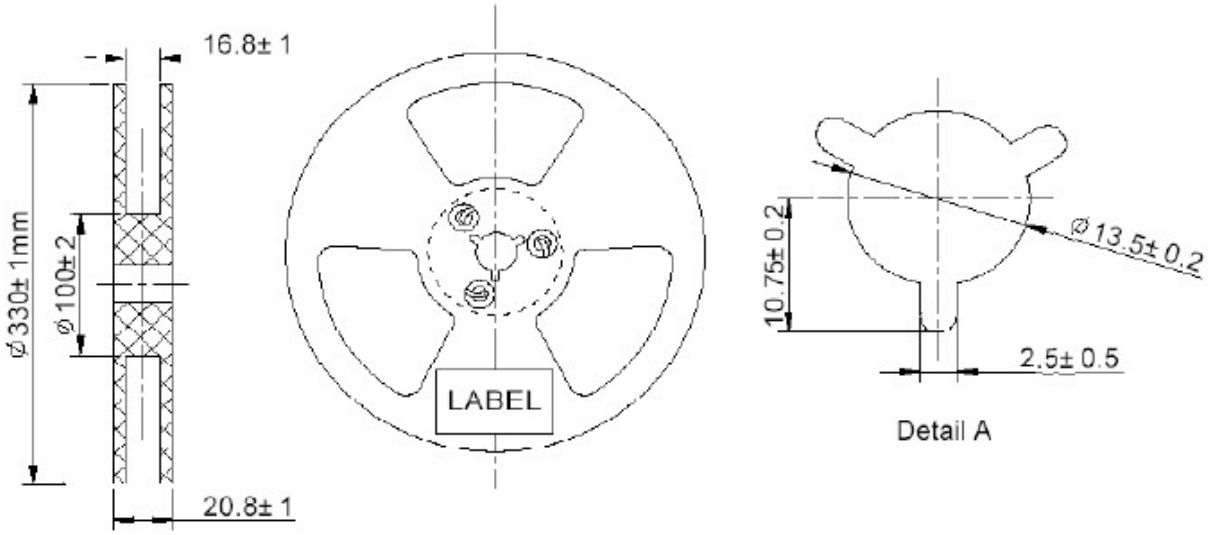

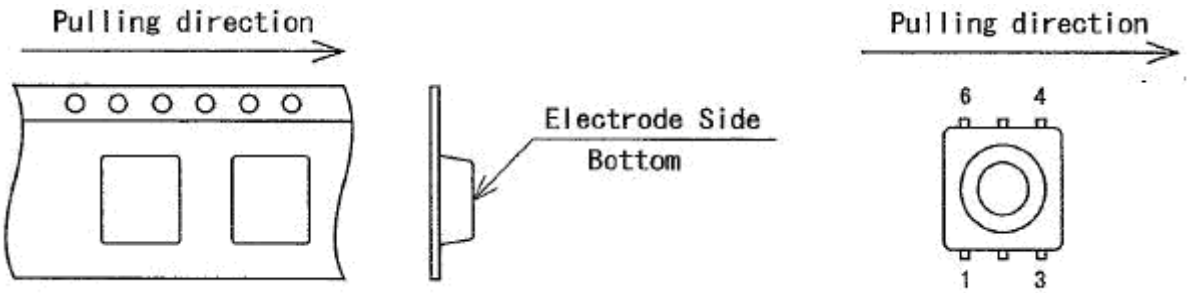

Package

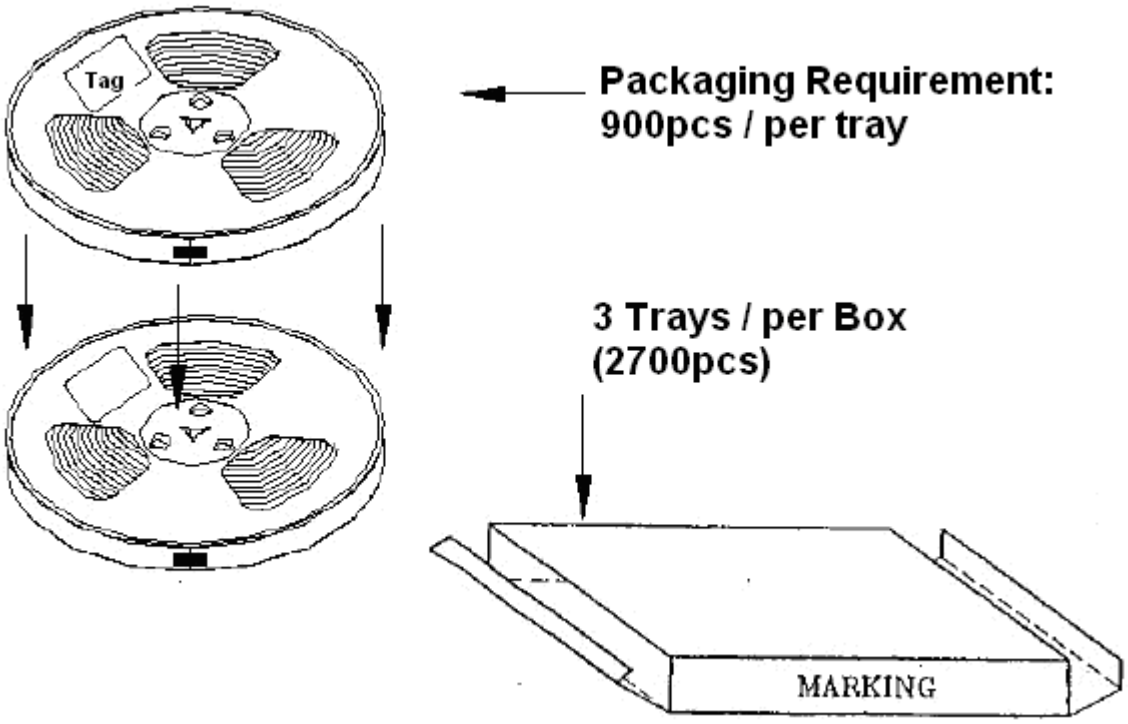
Tag
Packaging Requirement:
900pcs / per tray
3 Trays / per Box
(2700pcs)
MARKING

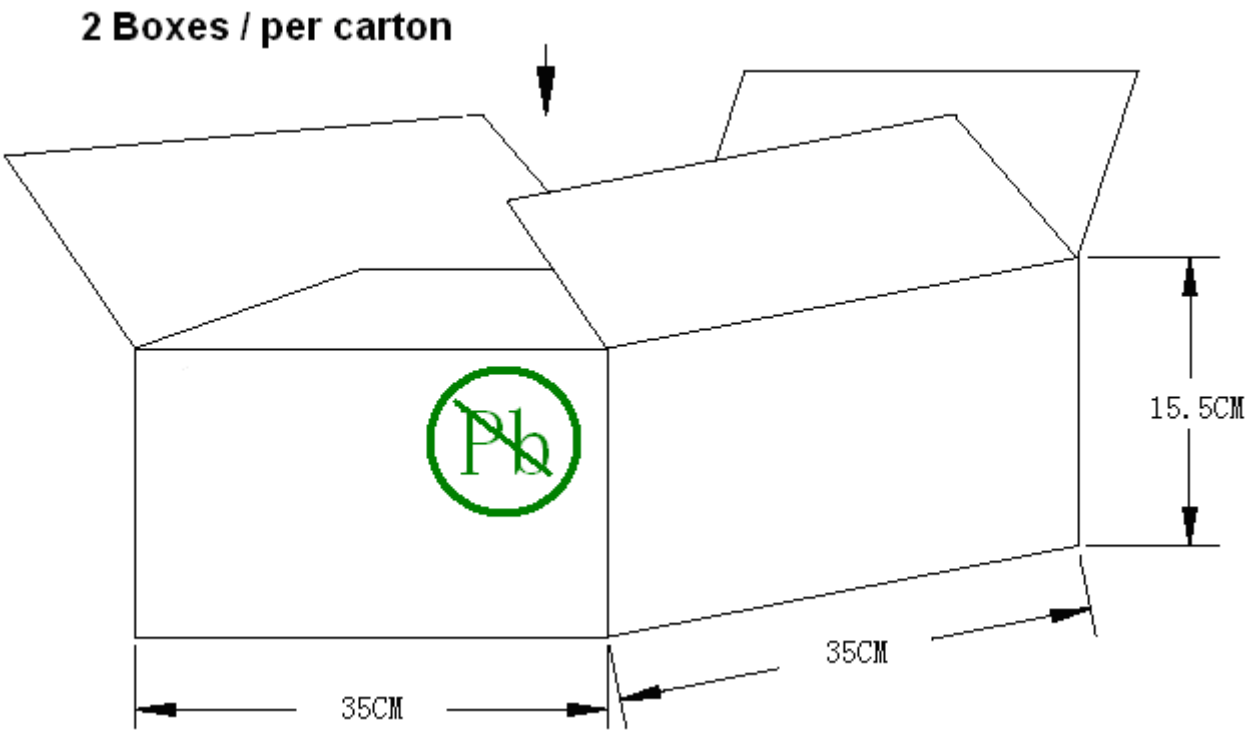
2 Boxes / per carton
Pb
15.5CM
35CM
35CM